beko

Dishwasher
User's Manual

DIN28Q20

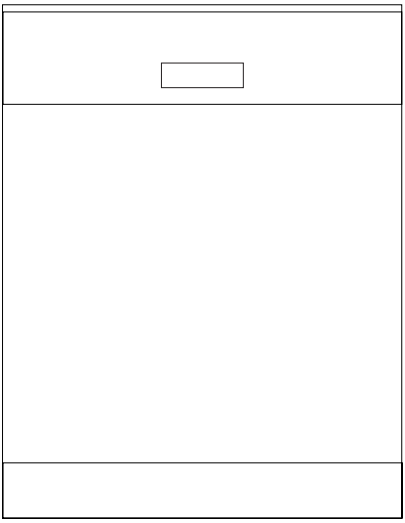

Dishwasher
User's Manual

DIN28Q20

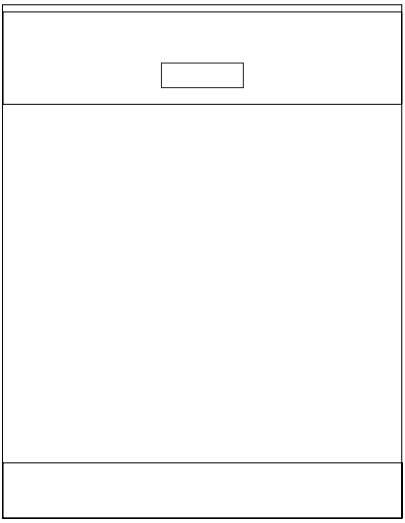

Please read this user manual first!

Dear Customer,

We hope that you get the best results from your product which has been manufactured with high quality and state-of-the-art technology. Therefore, please read this entire user manual and all other accompanying documents carefully before using the product and keep it as a reference for future use. If you handover the product to someone else, give the user manual as well. Follow all warnings and information in the user manual. Remember that this user manual is also applicable for several other models. Differences between models will be identified in the manual.

Explanation of symbols

Throughout this User Manual the following symbols are used:

	Important information or useful hints about usage.
	Warning for hazardous situations with regard to life and property.
	Warning for electric shock.
	Packaging materials of the product are manufactured from recyclable materials in accordance with our National Environment Regulations.

Do not dispose of the packaging materials together with the domestic or other wastes. Take them to the packaging material collection points designated by the local authorities.

CONTENTS

1 INSTRUCTIONS FOR SAFETY AND ENVIRONMENT 4

General safety 4
Intended use 4
Children's safety 5
Disposing of packaging material 5
Transportation of the product 5
Compliance with WEEE Directive and Disposing of the Waste Product 6
Compliance with RoHS Directive 6
Package information 6

2 DİSHWASHER 7

Overview 7
Fan drying system 8
Technical specifications 8

3 INSTALLATİON 9

Appropriate installation location 9
Connecting water supply 9
Connection to the drain 9
Adjusting the feet 10
Electrical connection 10
This appliance must be earthed 10
Fitting a different plug 10
Initial use 11

4 PREPARATİON 12

Tips for energy saving 12
Water softening system 12
Adjusting the water softening system 12
Adding salt 12
Water hardness & regeneration settings 13
Detergent 15
Adding detergent 15
Tablet detergents 16
Rinse aid 17
Adjusting the height of the upper basket 20
Upper basket height adjustable rack 20
Collapsible upper basket tines 21
Cutlery basket 21
Collapsible lower basket tines 22
Upper cutlery basket 23

5 OPERATİNG THE PRODUCT 24

Keys 24
Preparing the machine 24
Programme selection 24
Auxiliary functions 26
Scheduling the washing time 27
Starting the programme 28
Cancelling the programme 28
Salt indicator ( ) 28
Rinse Aid indicator ( ) 29
End of programme 29
Water cut-off warning 29
Overflowing warning 29
InnerClean 29

6 MAİNTENANCE AND CLEANİNG 30

Cleaning the outer surface of the product 30
Cleaning the interior of the machine 30
Cleaning the filters 30
Cleaning the hose filter 31
Cleaning the impellers 31
Lower impeller 31
Upper impeller 32
Top Impeller 32

7 TROUBLESHOOTİNG 33

8 GUARANTEE 38

1 Instructions for safety and environment

This section contains safety instructions that will help to give protection from risk of personal injury or property damage. Failure to follow these instructions shall void all warranties.

General safety

- Never place the product on a carpet-covered floor; otherwise, lack of airflow beneath the product will cause electrical parts to overheat. This will cause problems with your product.
- Do not operate the product if the power cable / plug is damaged! Call the Authorised Service Agent.
- Connect the product to a grounded outlet protected by a fuse complying with the values in the "Technical specifications" table. Do not neglect to have the grounding installation made by a qualified electrician. Our company shall not be liable for any damages that will arise when the product is used without grounding in accordance with the local regulations.
- The water supply and draining hoses must be securely fastened and remain undamaged.
- Unplug the product when not in use.
- Never wash the product by spreading or pouring water onto it! There is the risk of electric shock!
- Never touch the plug with wet hands! Never unplug by pulling on the cable, always pull out by grabbing the plug.
- The product must be unplugged during installation, maintenance, cleaning and repairing procedures.
- Always have the repair procedures carried out by the Authorised Service Agent. Manufacturer shall not be held liable for damages that may arise from procedures carried out by unauthorised persons.
- Never use chemical solvents in the product. They bring forth the risk of explosion.
- When you pull the upper and lower baskets out completely, the door of the product will bear all the weight of the baskets. Do not put other loads on the door; otherwise, the product may tilt.
- Never leave the door of the product open apart from loading and unloading procedures.
- Do not to open the door of the product when it is running unless necessary. Be careful for the rush of hot steam when you need to open the door.

Intended use

- This product has been designed for domestic use.

- It must be used to do the domestic type dishes only.
- This appliance is intended to be used in household and similar applications such as:

- Staff kitchen areas in shops, offices and other working environments.

- Only dishwasher safe detergents, rinse aids and additives must be used.
- The manufacturer waives any responsibility arisen from incorrect usage or transportation.
- This appliance can be used by children aged from 8 years and above and persons with reduced physical,sensory or mental capabilities or lack of experience and knowledge if they have been given supervision or instruction concerning use of the appliance in a safe way and understand the hazards involved. Children shall not play with the appliance. Cleaning and user maintenance shall not be made by children without supervision.

Children's safety

- Electrical products are dangerous for the children. Keep children away from the product when it is in use. Do not let them to tamper with the product.
- Do not forget to close the door of the product when leaving the room where it is located.
- Store all detergents and additives in a safe place away from the reach of the children.

Disposing of packaging material

Packaging materials are dangerous to children. Keep packaging materials in a safe place away from reach of the children.
Packaging materials of the product are manufactured from recyclable materials. Dispose of them properly and sort in accordance with recycled waste instructions. Do not dispose of them with normal domestic waste.

Transportation of the product

If you need to move the product, do it in upright position and hold from the rear side. Tilting the product onto its front side may cause the electronic parts in it get wet and damaged.

1. Unplug the product before transporting it.
2. Remove water drainage and water supply connections.
3. Drain the remaining water in the product completely.

Compliance with WEEE Directive and Disposing of the Waste Product

This product complies with EU WEEE Directive (2012/19/EU). This product bears a classification symbol for waste electrical and electronic equipment (WEEE). This product has been manufactured with high quality parts and materials which can be reused and are suitable for recycling. Do not dispose of the waste product with normal domestic and other wastes at the end of its service life. Take it to the collection center for the recycling of electrical and electronic equipment. Please consult your local authorities to learn about these collection centers.

Compliance with RoHS Directive

The product you have purchased complies with EU RoHS Directive (2011/65/EU). It does not contain harmful and prohibited materials specified in the Directive.

Package information

Packaging materials of the product are manufactured from recyclable materials in accordance with our National Environment Regulations. Do not dispose of the packaging materials together with the domestic or other wastes. Take them to the packaging material collection points designated by the local authorities.

2 Dishwasher

Overview

1. Upper basket
2. Upper impeller
3. Lower impeller
4. Filters
5. Lower basket
6. Rating Label
7. Control panel
8. Door
9. Detergent dispenser
10. Silverware basket
11. Salt reservoir lid
12. Upper basket rail
13. Upper cutlery basket
14. Ceiling impeller
15. Fan drying system (depends on model)

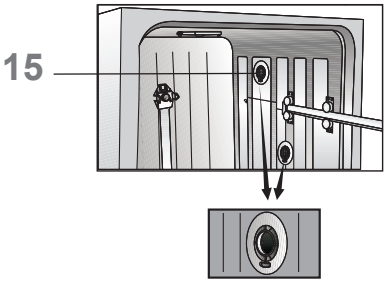

Technical specifications

Compliance to standards and test data / EC declaration of conformity
This product complies with the following EU directives;
Development, production and sales stages of this product comply with the safety rules included in all pertaining European Community regulations.
2006/95/EC, 2004/108/EC, 93/68/EC, IEC 60436/DIN 44990, EN 50242

Power input	220-240 V, 50 Hz (see rating label)
Total power consumption	1800-2100 W (see rating label)
Heater power consumption	1800 W (see rating label)
Total current (depends on the model)	10 A (see rating label)
Drain pump power consumption	30 W (see rating label)
Water pressure	0.3 -10 bar (= 3 - 100 N/cm² = 0.01-1.0 Mpa)

Technical specifications may be changed without prior notice to improve the quality of the product.

Figures in this manual are schematic and may not match the product exactly.

Values stated on the markings of the product or in the printed documents accompanying the product are obtained in the laboratory on basis of the relevant standards. Depending on operational and environmental conditions of the product, these values may vary.

Fan drying system

Fan drying system ensures efficient drying of your dishes.
It is normal to hear a different sound than that of washing cycle during fan operation.

Note for test institutions:
Data required for performance tests shall be provided upon request. Requests can be e-mailed to the following address:
dishwasher@standardloading.com
Do not forget to provide the code, stock and serial numbers of the product to be tested in your request e-mail along with your contact information. Code, stock and serial numbers of the product may be found on the type label attached to the side wall of the door.

3 Installation

To make the product ready for use, make sure that the electricity, tap water supply and water drainage systems are appropriate before calling the Authorised Service Agent. If they are not, call a qualified technician and plumber to have any necessary arrangements carried out.

	Preparation of the location and electrical, tap water and waste water installations at the place of installation is under customer's responsibility.
	Manufacturer shall not be held responsible for damages arising from processes carried out by unauthorised persons.
	Prior to installation, visually check if the product has any defects on it. If so, do not have it installed. Damaged products cause risks for your safety.
	Make sure that the water inlet and discharge hoses are not folded, pinched or crushed while pushing the product into its place after installation or cleaning procedures.

When placing the product, pay attention not to damage the floor, walls, piping, etc. Do not hold the product from its door or panel to move it.

Appropriate installation location

- Place the product on a solid and flat floor that has sufficient load carrying capacity! The product must be installed on a flat surface in order for the door to be closed comfortably and securely.
- Do not install the product at places where temperature may fall below 0°C.
- Place the product on a rigid floor. Do not place it on a long pile rug or similar surfaces.

	Ensure the power cable does not get trapped under the product.

- Make sure that you select a location that will allow you to load and unload the dishes in a fast and comfortable manner.
- Install the product in a place close to the tap and the drain. Select the installation location by considering that it will not be changed after the connections are made.

Connecting water supply

- Do not use old or used water inlet hose on the new product. Use the new water inlet hose supplied with the product.
- Connect the water inlet hose directly to the water tap. Pressure coming from the tap should be minimum 0.3 and maximum 10 bars. If the water pressure exceeds 10 bars, a pressure relief valve should be installed in between.
- Open the tap completely after making the connections to check for water leaks.

	For your safety, close the water inlet tap completely after the washing programme is over.

Connection to the drain

Water discharge hose can directly be connected to the drain hole or sink's drainage. The length of this connection

must be min. 50 cm and max. 100 cm from the floor. A discharge hose longer than 4 meters will cause washing performance to be affected.Attach the water discharge hose to the drainpipe without bending it. Tightly fix the water discharge hose to the drainpipe in order to prevent any dislocation of the water discharge hose during operation of the product.

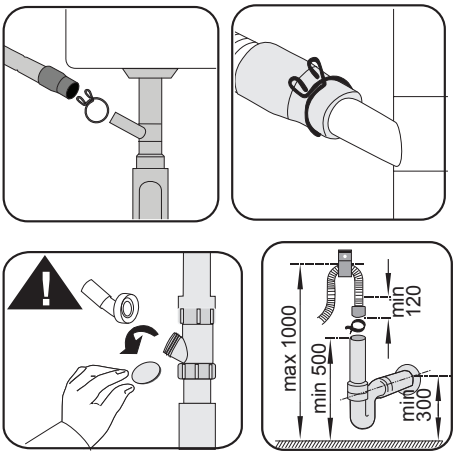

Drainpipe must be connected to the foul water system and it should not be connected to any surface water drain.

Adjusting the feet

If the door of the product cannot be closed properly or if the product wobbles when you push it slightly, then you need to adjust the feet of the product. Adjust the feet of the product as illustrated in the relevant section.

Electrical connection

Before you insert the plug into the wall socket make sure that the voltage and the frequency shown in the rating label corresponds to your electricity supply.

We recommend that this appliance be connected to the mains supply via a suitable switched and fused socket in a readily accessible position.

If the supply cord or the mains lead is damaged please do not replace it yourself. The supply cord or the mains lead must be replaced by a Authorised Service Agent or a similarly qualified person.

This appliance must be earthed

If the fitted moulded plug is not suitable for your socket, then the plug should be cut off and an appropriate plug fitted. Destroy the old plug, which is cut off as a plug with a bared cord could cause a shock hazard if inserted into a socket elsewhere in the house.
The moulded plug on this appliance incorporates a 13A fuse. Should the fuse need to be replaced an ASTA approved BS1362 fuse of the same rating must be used. Do not forget to refit the fuse cover. In the event of losing the fuse cover, the plug must not be used until a replacement fuse cover has been fitted. Colour of the replacement fuse cover must be the same colour as that visible on the pin face of the plug. Fuse covers are available from any good electrical store.

Fitting a different plug

As the colours of the wires in the mains lead of this appliance may not correspond

with the coloured markings identifying the terminals on your plug, proceed as follows:

1. Connect the green - yellow or green (earth) wire to the terminal in the plug marked 'E' or with the symbol ⏚ or coloured green and yellow or green.
2. Connect the blue (neutral) wire to the terminal in the plug marked 'N' or coloured black.
3. Connect the brown (live) wire to the terminal in the plug marked 'L' or coloured red.

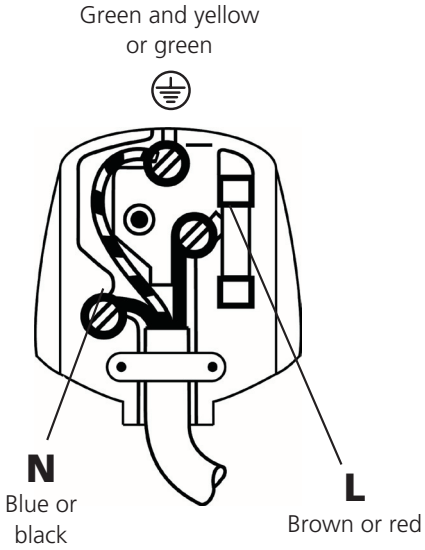

With the alternative plugs a 13A fuse must be fitted either in the plug or adaptor or in the main fuse box. If in doubt contact a qualified electrician.

Initial use

Before starting to use the product, make sure that all preparations are made in accordance with the instructions in sections "Important safety instructions" and "Installation".

- Before using the product, fill the salt reservoir with 1 litre of water, add salt (see next page) and stir to dissolve. Run the Dishwasher without dishes on a short programme with a small amount of detergent.

⚠	There might be a small amount of water left in the product after factory quality control tests. This causes no harm to the product.

Tips for energy saving

Following information will help you use the product in an ecological and energy-efficient manner.
Wipe away any coarse food remnants on the dishes before putting them in the product. Operate the product after filling it completely. When selecting a programme, consider the table of "Programme data and average consumption values".
Do not put more detergent than suggested on the detergent package.

Water softening system

	Your dishwasher requires soft water. If the hardness of the water is above 6°dH, the water must be softened and descaled. Otherwise, ions that create the hardness will accumulate on the surfaces of the dishes and may adversely affect the washing, shining and drying performances of the product.

The product is equipped with a water softening system which reduces the hardness of incoming water. This system softens the supply water that enters into the product to a level that will allow washing the dishes with the required quality.

Adjusting the water softening system

Washing performance will increase when water softening system is adjusted properly. Adjust the new water hardness level according to the Water hardness level instruction in this booklet.

Adding salt

Water softening system needs to be regenerated in order that the product operates with the same performance continuously. Dishwasher salt is used for this purpose.

	Use only special softening salts produced particularly for the dishwashers in your machine.

	We recommend using granular or powder softening salts. Do not use salts that are insoluble in water such as table salt or common salt. Performance of water softening system may get worse in time.

	Salt reservoir will fill with water when you start the product. Therefore, add the softening salt before starting the machine.

1. First take the lower basket out to add softening salt.

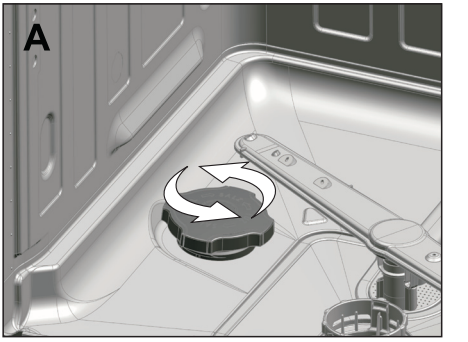

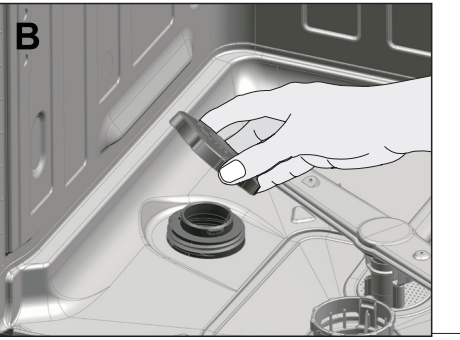

2. Turn the salt reservoir lid counter clockwise to open it (A, B).

	Salt reservoir will fill with water when you start the product. Therefore, add the softening salt before starting the machine.

	Before initial use, fill the water softening system with 1 litre of water (C).

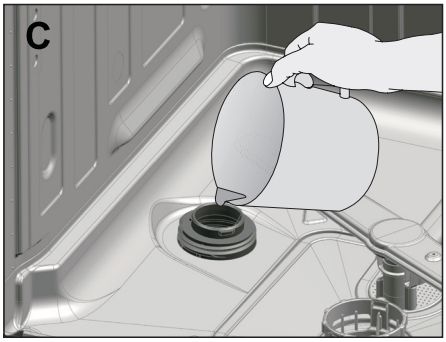

3. Fill the salt reservoir with salt by using salt funnel (D). To speed up dissolution rate of salt in water, stir it with a spoon.

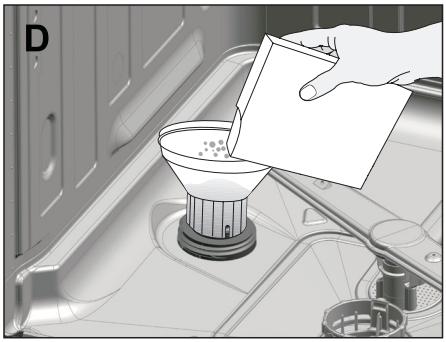

	You can put about 2 kg of Dishwasher salt into the salt reservoir.

4. Replace the lid and tighten it securely when the reservoir is full.
5. If you will not start a washing programme immediately after adding the salt, run the machine empty in the shortest programme to dissolve and wash away the scattered salt in the machine.

	Since different salt brands in the market have different particle sizes and since the water hardness may vary, dissolution of the salt in water may take a couple of hours. Therefore, Salt Indicator remains on for a while after adding salt into the machine. Loose salt grains can cause rust marks in your machine if not rinsed away. Only fill salt just before a programme is run.

Water hardness & regeneration settings

The dishwasher requires lime free water. Hard water leaves watermarks on your dishes. Your dishwasher has a special water softening system to remove the hardness of the tap water. Setting this system correctly will increase the washing effectiveness.
To find out the hardness level of water in your area, contact your local Water Board or Determine water hardness level by the help of test strip provided.
If you move to a different location, the level of water hardness will possibly be different. It is essential to reset the water hardness in order to obtain optimum washing efficiency.

Test Strip

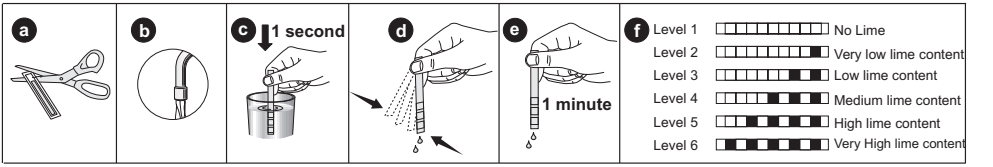

Remove the test strip from its packing.

Let the water flow from your tap for 1 minute.

Fill a glass with tap water and dip the test strip into water for 1 second.

Take the test strip out of the water and shake it.

Hold for 1 minute.

Set the water hardness level of your dishwasher according to the result shown by the test strip.

To Adjust the Water Hardness

1. After turning on the machine, press Time Delay and P+/P keys simultaneously. After the countdown (3,2,1) is displayed keep the keys pressed for a while.
2. Press P+/P key to activate the r position.
3. Using Time Delay key, adjust water hardness level according to the hardness of the supply water. See "Water hardness level adjustment table" for correct setting.
4. Press On / Off key to save the setting.

Water Hardness Level Adjustment Table

Hardness Level	English Water Hardness °dE	German Water Hardness °dH	French Water Hardness °dF*	Water Hardness Level Indicator	
1st Level	0-5	0-4	0-8	Press the Time Delay key to switch the water hardness level to position 1.	r1
2nd Level	6-9	5-7	9-13		
3rd Level	10-15	8-12	14-22	Press the Time Delay key to switch the water hardness level to position 2.	r2
4th Level	16-19	13-15	23-27	Press the Time Delay key to switch the water hardness level to position 3.	r3
5th Level	20-24	16-19	28-34	Press the Time Delay key to switch the water hardness level to position 4.	r4
6th Level	25-62	20-50	35-90	Press the Time Delay key to switch the water hardness level to position 5.	r5

If the hardness level of the water that you use is above 90°dF (French standard for water hardness) or if you are using well water, than it is recommended to use filter and water purification devices.

* If the hardness level of the water that you use is below 8°dF (French standard for water hardness), there is no need to use salt in your dishwasher. If this is the case, Salt Indicator (if any) illuminates continuously on the panel of your machine.

If the water hardness is set to level 1, the Salt Indicator will illuminate continuously although it is not necessary to use salt. If you use salt under this condition, salt will not be consumed and the lamp will not illuminate.

If you move your house, it is very important to make the water hardness level adjustment of your machine according to the new location you move in order to preserve the washing efficiency.
If the water hardness level of your machine is adjusted previously, your machine will display the most recent hardness level adjustment. Adjust the new water hardness level of the machine based on the water hardness level of the tap water.

Detergent

You can use powder or tablet detergent in the machine.

Only use in the machine the detergents produced particularly for use with dishwashers. We recommend you not to use detergents that contain chlorine and phosphate as they are harmful for the environment.

Contact the detergent producer if the dishes are wet and/or if you notice limescale spots particularly on glasses after the washing programme is over.

Adding detergent

Refer to the "Programme Table" to determine the correct amount of detergent for the selected programme.

Do not put solvents into the detergent dispenser. There is the risk of explosion!

Put the detergent into the detergent dispenser just before operating the machine as illustrated below.

1. Push the latch to right to open the detergent dispenser lid (A).

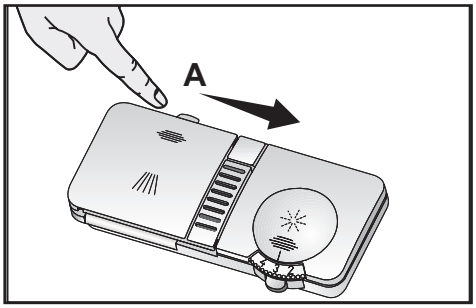

2. Put suggested amount of powder or tablet detergent in the dispenser.

Inside the detergent dispenser, there are level markings that help you use appropriate amount of detergent. When brimful, detergent dispenser will contain 40 cm³ of detergent. Fill detergent up to 15 cm³ or 25 cm³ level marks in the detergent dispenser according to fullness of the machine and/or soiling degree of the dishes (1).

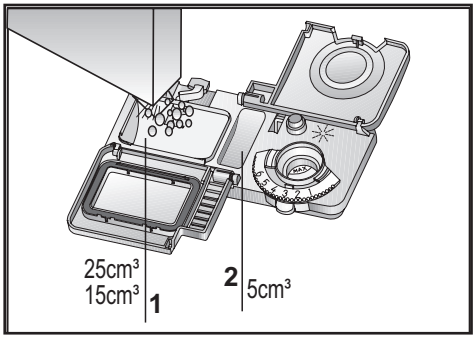

If dishes have been waiting for a long time and have dried residues, fill the 5 cm³ compartment too (5).

3. Close the detergent dispenser lid by pressing on it lightly. A "click" will be heard when the lid is closed.

In programmes with prewash and at high temperature, in which you use tablet detergents, make sure that the detergent dispenser lid is closed firmly.

Use powder detergent in short programmes without prewash since the solubility of the tablet detergent changes depending on the temperature and time.

Excessive usage of powder detergents will cause the detergent not dissolve completely and will also cause scratches on the glassware.

Tablet detergents

Tablet detergents exhibit water softening and / or rinse aid effect in addition to detergent effect. Some types of these detergents also contain special-purpose washing chemicals such as glass and stainless steel protectors.

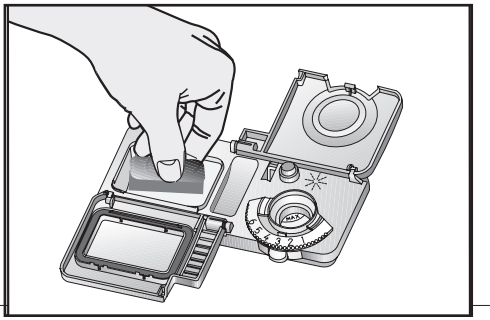

Tablet detergents give satisfying results only under certain usage conditions. The best washing performance in dishwashers is obtained by using detergent, rinse aid and water softening salt individually.

Information about suitable places (detergent dispenser, basket etc.) in the dishwasher to place the tablet can be found amongst the usage instructions on the packages of the tablet detergents.

Tablet detergent types commonly found in the market:
2in1: Contains detergent, rinse aid or water softening salt
3in1: Contains detergent, rinse aid and water softening salt
4in1: Contains glass protectors in addition to detergent, rinse aid and water softening salt
5in1: Contains glass and stainless steel protectors in addition to detergent, rinse aid and water softening salt

Observe the instructions of the detergent manufacturer on the package when using tablet detergents.

When you switch to powder detergent from tablet detergent:

1. Make sure that salt and rinse aid reservoirs are full.
2. Set the water hardness to the highest level and perform an empty run.
3. After the empty washing cycle, review the user manual and readjust the water hardness level so as to suit the water supply.

4. Make the appropriate rinse aid settings.

Depending on the model, salt indicator and/or rinse aid indicator must be enabled again if they were disabled before.

Rinse aid

The rinse aid used in dishwashers is a special combination used to increase drying efficiency and prevent water or limescale stains on the washed items. For this reason, care must be paid to have rinse aid in the rinse aid reservoir and to use rinse aids produced specially for dishwashers only.

1. Open the lid of the rinse aid reservoir by pressing its latch (B).

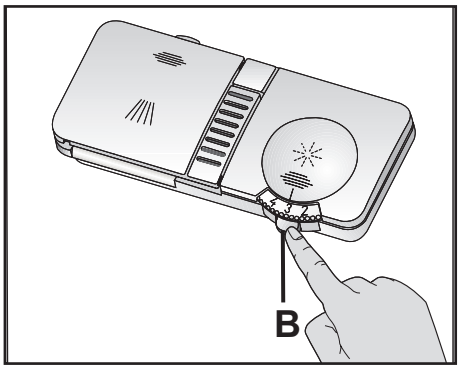

2. Fill the reservoir until "MAX" level.
3. Close the lid of the reservoir by pressing on it lightly.

Wipe clean any spilled rinse aid outside the reservoir. Rinse aid that spilled accidentally will cause foaming and it will eventually decrease washing performance.

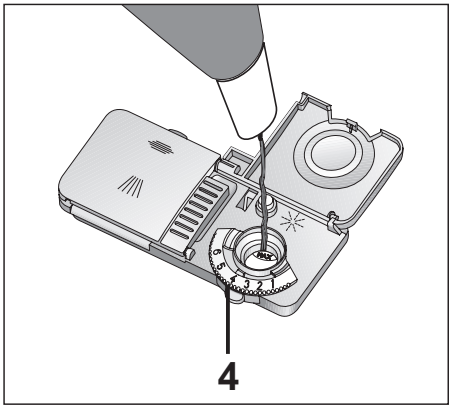

4. Turn the rinse aid amount adjuster manually to a position between 1 and 6 (4). If there are stains on tableware items after washing, level must be increased and if there is a blue trace after wiping them by hand, it must be decreased. This is set to position 4 as factory default.

Items not suitable for washing in the dishwasher

- Never wash dishes soiled by cigarette ash, candle remnants, polish, dyestuff, chemicals, etc. in your dishwasher.
- Do not wash iron alloy items in the dishwasher. It can get corroded or leave stains on other items.
- Do not wash cutlery with wooden or bone stems, glued pieces, or pieces that are not resistant to heat, as well as copper and tin-plated containers in the dishwasher.

Decorative prints of chinaware as well as aluminum and silver items may get discoloured or tarnished after washing in the dishwasher just as it happens in handwashing as well. Some delicate glass types and crystals may become dull in time. We strongly recommend you to check if the tableware you are going to purchase is suitable for washing especially in the dishwasher.

Placing the dishes into the dishwasher

You can use your dishwasher in the optimum way with respect to energy consumption and washing and drying performance only if you place the dishes in an orderly way.

- Wipe away any coarse food remnants (bones, seeds, etc.) on the dishes before placing them in the dishwasher.
- Place thin, narrow pieces in the middle sections of baskets if possible.
- There are two separate baskets in which you can place your dishes in the dishwasher. Place the heavily soiled and bigger items in the lower basket and smaller, delicate and light items in the upper basket.
- Place the hollowed dishes such as bowls, glasses and pans upside down in the dishwasher. Thus, accumulation of water in deep hollows is prevented.

To prevent possible injuries, always place the sharp and pointed dishes such as service fork, bread knife, etc. upside down so as their pointed ends will face down or they will lie horizontally in the dish basket.

Unload dishes in the lower basket first and then the dishes in the upper basket.

Suggestions for loading the dishwasher

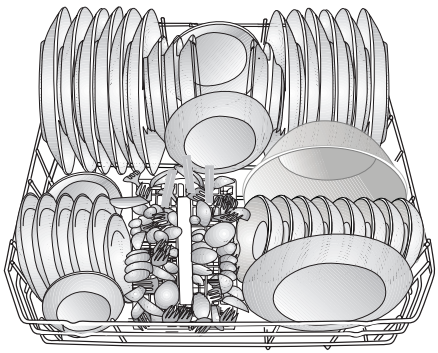

Lower basket

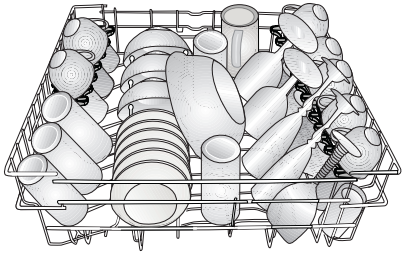

Upper basket

Improper Loading Of Dishware

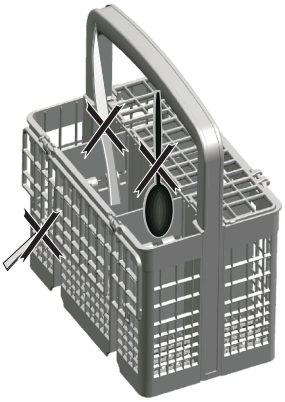

Improper Loading Of Dishware

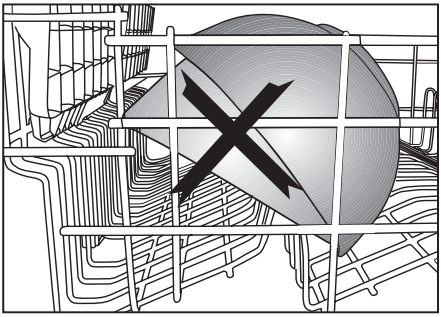

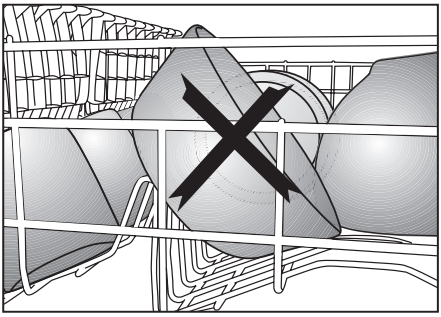

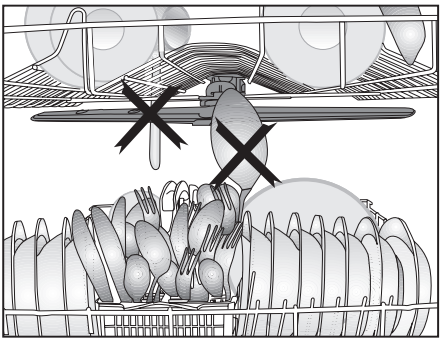

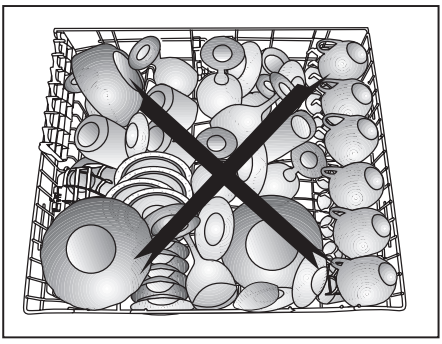

Adjusting the height of the upper basket

Basket adjustment mechanism on the loaded upper basket of the machine is designed to allow you create taller areas in the upper or lower section of the machine based on your requirements by adjusting the height of the loaded basket in up or down directions.
To raise the basket:
Grab one of the upper basket wires (right or left) and lift it up (A).
Repeat the same process to raise the other side of the basket.

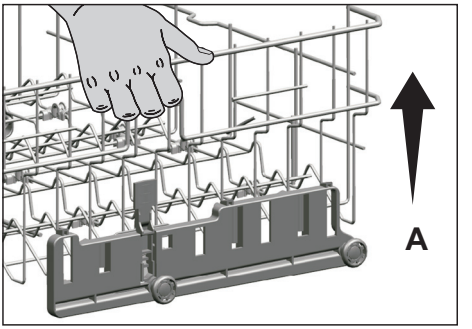

Make sure that both sides of the loaded basket height adjustment mechanism are at the same level (down or up).
To lower the basket:
Press the latch on the loaded basket adjustment mechanism (right and left) to lower the basket (B).

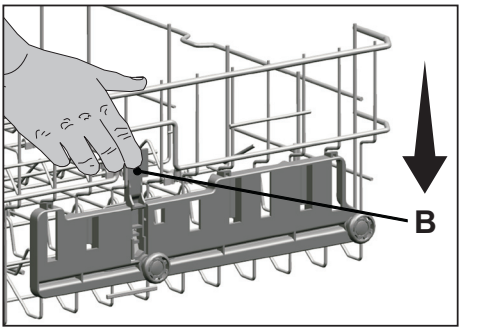

Repeat the same process to lower the other side of the basket.
Make sure that both sides of the loaded basket height adjustment mechanism are at the same level (down or up).

Upper basket height adjustable rack

Use the lower and upper parts of the height adjustable racks in the upper basket of the machine by sliding them down or up according to the heights of the glasses, cups or etc. (A, B, C).

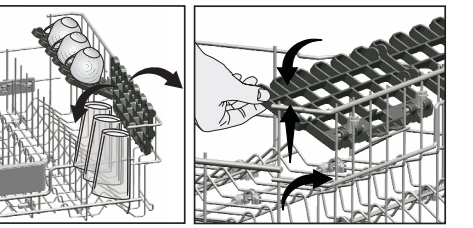

Collapsible upper basket tines

There are foldable tines on the upper basket of the machine that you can lay down when you need larger space for big dishes. On your upper basket there are two types of laying tines namely, fully laid system (A) and gradually laid system (B). To bring the foldable tines into horizontal position, push the tines in the direction of the arrow by holding from the middle. Place your larger dishes into the area created. To bring the tines back to vertical position, just lift them up. Foldable tines will then snap in the latch again.

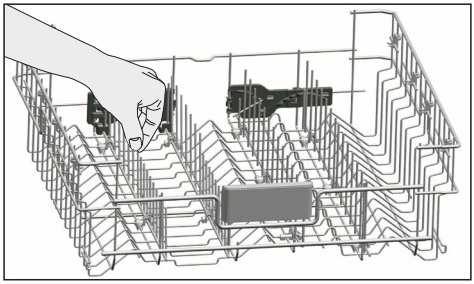

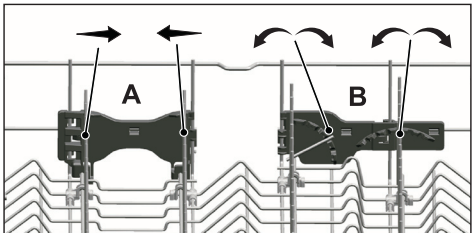

Holding the tines from ends to put them in lying position may cause the tines to bend. For this reason, it will be appropriate to hold the tines in the middle from their bottoms and to push in the direction of the arrow to lay down or bring them to vertical position.

Cutlery basket

Cutlery basket is designed to wash your dishes such as knife, fork, spoon, etc. in an efficient manner.
Since the cutlery basket can be moved (A, B), you can create more space while placing your dishes in the lower basket and free up space for your dishes of different sizes.

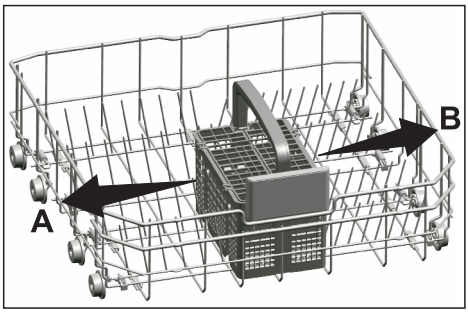

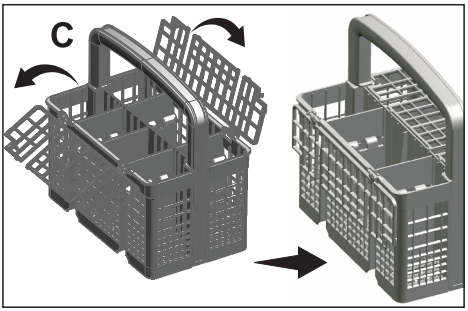

Collapsible lower basket tines

The six piece foldable tines (A) located at the lower basket of the machine are designed for an easier placement of large pieces such as pans, bowls, etc. You can create larger spaces by folding each tines individually or all of them at once.

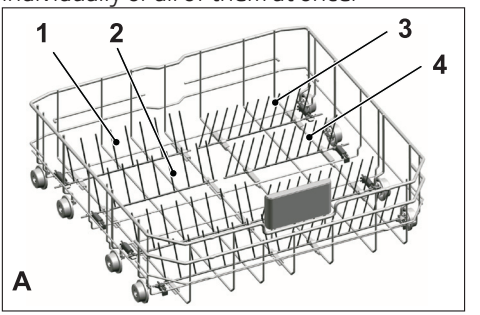

To bring the collapsible tines into horizontal position, grab the tines from mid position and push them in the directions of arrows (B). To bring the tines back to vertical position, just lift them up. Collapsible tines will click into the latch again (C).

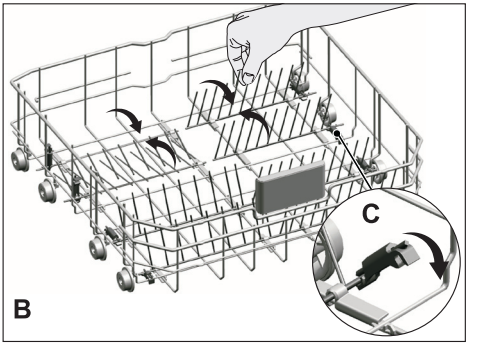

Bringing the tines to the horizontal position by holding them from the tips may cause them to bend. Therefore, it will be appropriate to bring the tines in the middle to horizontal or vertical position by holding them from their stems and pushing in the direction of arrow.

Upper cutlery basket

The upper cutlery basket is designed for small dishes, or long items that cannot fit into the lower cutlery basket.

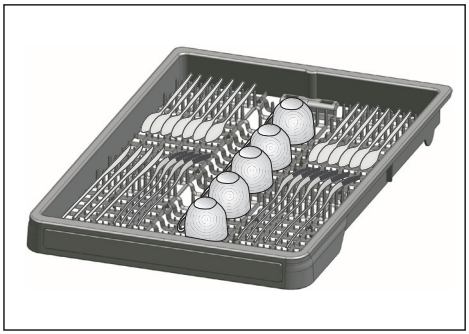

Thanks to the easy take-out-from-the-machine feature, it allows taking out the dishes from the machine together with the basket after they are washed (A). Since it can fit into all standard size drawers, it does not require the dishes to be removed from the basket and placed into the kitchen drawers or shelves.

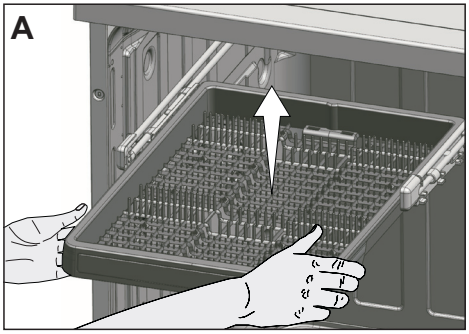

If you don't want to use the upper cutlery basket, pull it back to yourself to remove it from the machine, rotate the rail lids towards outside and pull them towards yourself to take them out (B).

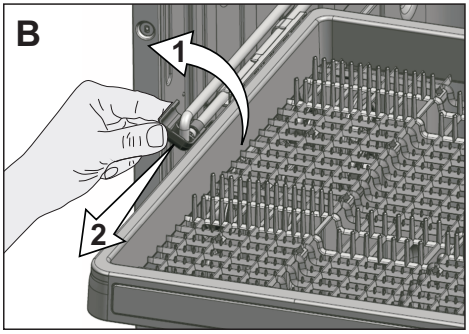

After taking out the basket by lifting it up, remove the carrier part from the rails by pulling it towards yourself (C).

Replace the rail lids and push them back to seat them into their places. Turn the rails inside the machine sideways to seat them properly in their places (D).

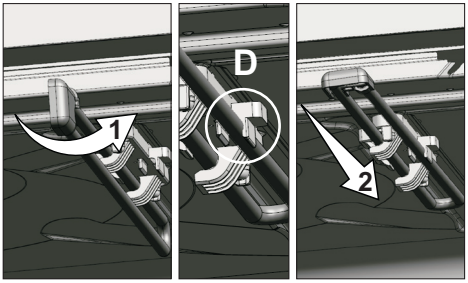

In order to replace the upper cutlery basket into its place again, repeat the same process in reverse order.

5 Operating the product

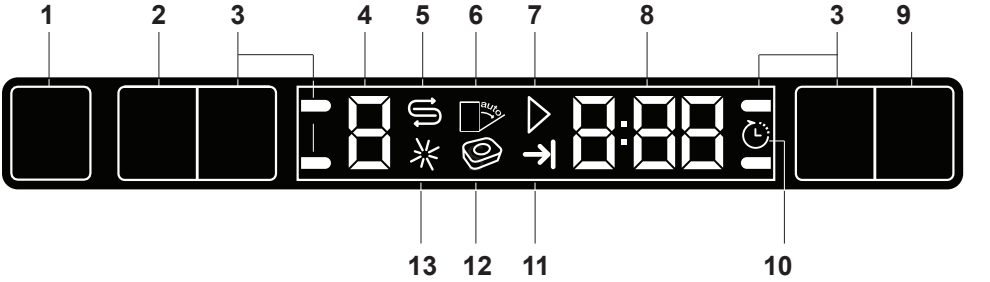

1. On/Off key
2. Programme Selection / Programme Cancel (3 seconds) key
3. Function keys
   F1 Half Load Function
   F2 Fast+ Function
   F3 SteamGloss function
   F4 AquaIntense Function
4. Programme indicator
5. Salt indicator
6. Not in use
7. Start / Cancel indicator
8. Time Delay / Programme Time indicator
9. Time Delay key
10. Time Delay indicator
11. End of Programme indicator
12. Not in use
13. Rinse Aid indicator

Keys

On/Off key

When you press On / Off key, indicator lights illuminate on the display for ON position. The lights turn off in OFF position.

Programme Selection / Programme Cancel key

Press this key until the desired programme appears in the programme indicator.
To cancel the running program, keep the Programme Selection /Programme Cancel key pressed for 3 seconds.

Function keys

If you press any of the Function keys during programme selection or time delay selection, an affirmative key signal will be heard provided that the relevant function is supported by the selected programme. Function will be deemed selected when the indicator of the selected function is lit.
To cancel the selected function, keep the function key pressed until the function indicator disappears.

Preparing the machine

1. Open the door of the dishwasher.
2. Place the dishes in accordance with the instructions in the user manual.
3. Make sure that the upper and lower impellers rotate freely.
4. Put adequate amount of detergent into the detergent dispenser.
5. Check if the Salt and Rinse Aid indicators light and add salt and/or rinse aid if needed.

Programme selection

1. Press On/Off key to turn on your machine.
2. Refer to the table of "Programme data and average consumption values" to determine a washing programme suitable for your dishes.
3. Selected programme will start when you close the door of your machine.

Programme Table									
Programme number	**0**	**1**	**2**	**3**	**4**	**5**	**6**	**7**	**8**
Programme name	InnerClean	Eco *	Auto	AquaFlex	Intensive	Quick&Clean	Glass Care	Mini 30	Prewash
Cleaning temperature	-	50 °C	40-65 °C	-	70 °C	70 °C	40 °C	35 °C	-
Degree of Soiling	This programme is recommended to be operated on each 1-2 months for machine cleaning and necessary hygiene. The programme should be operated while the machine is empty. In order to achieve an efficient result, it is recommended to use together with special machine cleaning agents	Most economical washing programme for the medium soiled daily dishes that are kept waiting.	Determines the soiling degree of the dishes and sets the temperature and amount of the washing water as well as the washing time automatically. Suitable for all types of dishes.	It is the most suitable washing programme for daily mixed dishes including plastic items. While delicate glass items are washed in the upper basket, pans and trays can be washed in the lower basket.	Suitable for heavily soiled dishes, pots and pans.	Daily washing programme at which the lightly soiled dishes that are kept waiting are cleaned in the fastest way.	Special program for gentle cleaning of delicate glassware.	Suitable for lightly soiled daily dishes that are scraped or pre-cleaned.	Suitable for removing the remnants on the soiled dishes that will be kept waiting in the machine for a few days, and thus, for preventing the bad odour buildup.
	-	Medium	Medium to high	Medium	High	Low - Medium	Low	Low	-
Detergents A=25 cm³/15 cm³ B=5 cm³	-	A+B	A	A+B	A+B	A+B	A	A	-
Prewash	-	+	+	+	+	-	+	-	+
Wash	-	+	+	+	+	+	+	+	-
Dry	-	+	+	+	+	+	+	-	-
Duration (min)	75	195	110-210	189	156	58	102	30	15
Water (l)	14,4	6	10,2-14,4	18,6	16,2	10,2	13	10,4	4
Energy (kWh)	0,70	0,92	0,90-1,45	1,36	1,43	1,30	0,92	0,80	-

* Reference programme for testing institutes. The tests in accordance with EN 50242 must be carried out with a full water softener salt dispenser and a full rinse aid reservoir, and using the test programme. The consumption values shown in the table were determined under standard conditions. Differences may therefore occur under practical conditions.

Auxiliary functions

Washing programmes of your dishwasher are designed to obtain the best cleaning effect, considering the type of the soiling, soiling degree and properties of the dishes to be washed.
Auxiliary functions allow you save from time, water and power.

	Auxiliary functions may cause changes in the programme duration.

	Auxiliary functions are not suitable for all washing programs. Indicator of the auxiliary function that is not compatible with the programme will not be active.

Half Load function

It is used to operate the machine without loading it completely.

1. Load your dishes in the machine as you like.
2. Turn the machine on with On/Off key.
3. Select the desired programme and press the Half Load key. The Half Load indicator will light on the display in the Function Selected indicator.
4. Close the door of the machine to start the programme.

	With the Half Load function you can save both water and power while using the lower and upper baskets of the machine.

Fast+ Function

It shortens the time of the washing cycle selected and decreases water consumption by enabling washing under higher pressure.

SteamGloss function

It provides superior drying performance.

AquaIntense Function

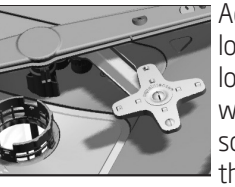

AquaIntense impeller located under the lower impeller helps washing your heavily soiled dishes places in the right side of the lower basket. It will give better results to place the most soiled dish to the right front side.

	Do not try to remove the AquaIntense impeller!

Automatic Detergent Detection Feature

The product has a feature to automatically detect the type of the detergent and adjust the washing programme and drying system to the best performance. If special tablet detergent is used, the programme duration can be extended by 20 minutes in order to optimize the washing and drying performance.

To deactivate:

1. After turning on the machine, press Time Delay and P+ keys simultaneously. Keep them pressed until the countdown 3, 2, 1 is completed on the display.
2. Press P+ key to activate the a: option. Automatic detergent detection feature is disabled at "a:0" option and enabled at "a:1" option. Set the desired option by pressing the Time Delay key.
3. Turn off the machine with On/Off key to save the changes.

Interior Lighting (Depends on the model)

Some models have interior lighting to illuminate the interior when the door is opened.

Changing the interior lighting setting

1. After turning on the machine, press Time Delay and P+ keys simultaneously. Continue to press until the countdown 3, 2, 1 is completed on the display.
2. Press P+ key to activate the L: option. The interior lighting is turned off at "L:0" option and turned on at "L:1" option. Set the desired option with the Time Delay key.
3. Turn off the machine with On/Off key to save the changes.

Floor illumination Warning to show that machine is in washing phase (depends on the model)

Your machine reflects a light to the floor during the washing process. This light turns off after the washing process is complete.

	Floor illumination is activated automatically when the washing programme starts and remains lit until the end of the programme.

	Floor illumination cannot be cancelled by the user.

Scheduling the washing time

Time Delay

If an economical electricity tariff is applied in your region, you can use the Time Delay function to wash your dishes during appropriate hours.

You can delay the start of the selected programme until 24 hours.

1. Press the Time Delay function key after selecting the washing programme and other auxiliary functions.
2. Once you press the Time Delay key, Display Information Line will show "0:30" and Time Delay indicator will start flashing.
3. Set the desired time by pressing the Time Delay key. Time will increase with increments of 30 minutes up to 6 hours and after that in 1 hour increments up to 24 hours every time you press the key.
4. Close the door of your machine after setting the Delayed Start. Once the delay time is over, the selected programme will start automatically.

Changing the settings while Time Delay function is active

While the Time Delay function is activated, you cannot make changes in the washing programme, auxiliary functions or the duration of delay time.

	Programme and auxiliary functions cannot be set/ changed after the programme has started.

To cancel the Time Delay function

1. Press and hold the Programme Selection / Programme Cancel keys for 3 seconds.
2. '3', '2', '1' will appear on the display while you keep Programme Selection / Programme Cancel keys pressed. Time Delay indicator will turn off at the end of the cancellation process and delaying process is cancelled.

	You can select and start a new programme following the cancellation of Time Delay function.

	Time Delay function cannot be set after the programme starts.

Starting the programme

Close the door of your machine to start it after selecting the programme and auxiliary functions.

	Your machine performs water softening depending on the hardness level of the supply water. Washing time can change while the programme is running depending on the ambient temperature where your machine is installed, temperature of the supply water and amount of the dishes.

	Pay attention not to open the door of the machine when it is running. There may be a rush of vapour when you open the door of your machine; be careful.

	The machine will remain silent in pause mode for some time in order to remove the water from the machine and on the dishes completely and to have the water softener cleaned, and then it will resume running in drying mode.

Cancelling the programme

Press and hold the Programme Selection / Programme Cancel keys for 3 seconds. Release the key as the Start/Cancel indicator starts flashing.
Once you close the door of your machine, draining is completed in 2 minutes and the machine gives an audible warning when it is completed.

	There might be residues of detergent or rinse aid in the machine and/or on the pieces being washed depending on the step the programme you have cancelled was in.

Salt indicator (⛁)

Please check the salt indicator on the display to see whether there is adequate amount of softening salt in the dishwasher or not. You need to refill the salt reservoir with salt whenever salt indicator appears on the display of your machine.

	Adjusting the water hardness level is explained in Water Softening System section.

Rinse Aid indicator (✳)

Please check the rinse aid indicator on the display to see whether there is adequate amount of rinse aid in the dishwasher or not. You need to refill the rinse aid reservoir with rinse aid whenever rinse aid indicator appears on the display of your machine.

End of programme

	When the programme you have selected comes to an end, an audible warning signal will warn you to turn off your machine. This audible signal will warn you with certain intervals before it turns off.

End of Programme indicator will light up when the washing programme is over.

1. Open the door of the machine.
2. Press On/Off key to turn off your machine.
3. Close the tap.
4. Unplug the machine from the socket.

	For energy saving, the machine is automatically turned off following the completion of the programme or if the programme is not started.

	Leave your dishes in the machine for about 15 minutes to allow them cool down after they are washed. Your dishes will dry in a shorter time if you leave the door of your machine ajar during this period. This process will increase the drying effectiveness of your machine.

Water cut-off warning

If mains water is cut or water inlet tap is turned off the machine cannot take water in and E:02 icon will flash on the programme indicator. As long as the problem continues, washing programme is paused and the water inlet is checked regularly by the machine; when the water is restored E:02 icon will disappear after a while and the washing programme resumes.

Overflowing warning

If the machine intakes too much water or there is leakage at any of the components then the machine will detect this and E:01 icon will flash on the Programme indicator. As long as the overflowing continues safety algorithm will be active and try to discharge the water. If overflowing stops and safety is assured, E:01 icon will disappear. If E:01 does not disappear, there is a permanent fault. In this case the authorised service should be contacted.

InnerClean

This programme is recommended to be operated on each 1-2 months for machine cleaning and necessary hygiene. The programme should be operated while the machine is empty.
In order to achieve an efficient result, it is recommended to use together with special machine cleaning agents.

	Do not use this programme to clean dishes. As it operates in high temperatures, it is harmful for the dishes.

6 Maintenance and cleaning

Service life of the product extends and frequently faced problems decrease if it is cleaned at regular intervals.

⚠	Unplug the product and turn off the tap before attempting any cleaning procedures.
ⓘ	Do not use abrasive substances for cleaning.
ⓘ	Clean the filter and impellers at least once a week to ensure the machine operates efficiently.

Cleaning the outer surface of the product

Clean the outer surface and door gaskets of the product gently with a mild cleaning material and damp cloth. Wipe the control panel only with a damp cloth.

Cleaning the interior of the machine

- Clean the interior of the machine and the tank by running a prewash programme without detergent or a long washing programme with detergent based on the degree of dirtiness.
- If water has remained in the machine, drain the water by performing the procedures under the topic "Cancelling a programme". If the water cannot be discharged, clean any leftover deposits that have piled up in the bottom of the machine, blocking the water path.

Cleaning the filters

Clean the filters at least once a week in order for the machine operates efficiently. Check if food residues are left on the filters. If there are food residues on filters, take them out and clean well under running water.

1. Turn the micro filter (1) and coarse filter (2) assembly counterclockwise and pull it out from its seating (A).

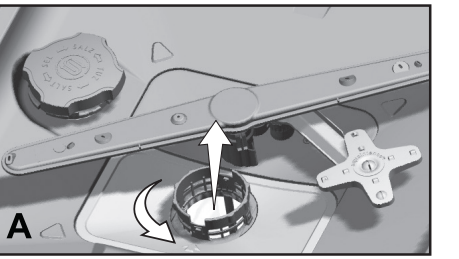

2. Pull out the metal / plastic filter (3) from the seating (C).

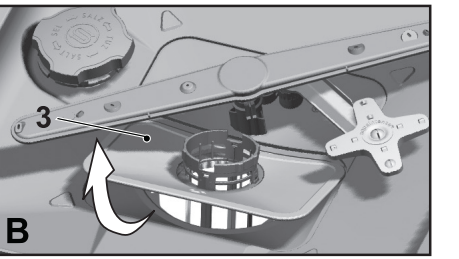

3. Press the two pawls on the coarse filter inwards and separate the coarse filter from the assembly (B).

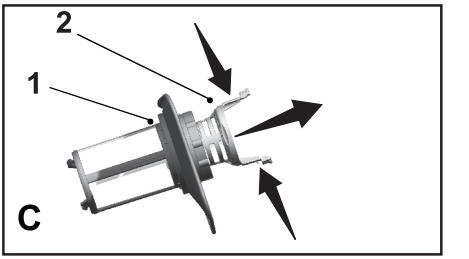

4. Clean all three filters under tap water by means of a brush.
5. Replace the metal/plastic filter.
6. Place the coarse filter into the microfilter. Make sure that it is properly seated. Turn the coarse filter clockwise until a "click" sound is heard.

	Do not use the dishwasher without filter.
	Incorrect placement of the filters will reduce washing efficiency.

Cleaning the hose filter

Damages on the machine that may be caused by impurities coming from the urban supply water or your own water installation (such as sand, dirt, rust, etc.) can be prevented by means of the filter attached to the water inlet hose. Check the filter and the hose regularly and clean them if necessary.

1. Turn off the tap and remove the hose.
2. After taking out the filter, clean it under running tap water.
3. Place the cleaned filter back to its seat in the hose.
4. Install the hose to tap.

(depends on model)

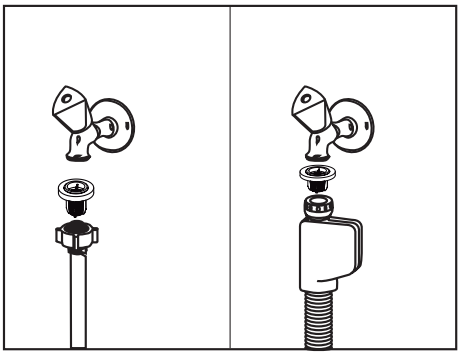

Cleaning the impellers

Clean the impellers at least once a week in order for the machine operates efficiently.

Lower impeller

Check if the holes on the lower impeller (1) are clogged. If they are clogged, remove and clean the impeller. Pull the lower impeller up to remove it (A, B).

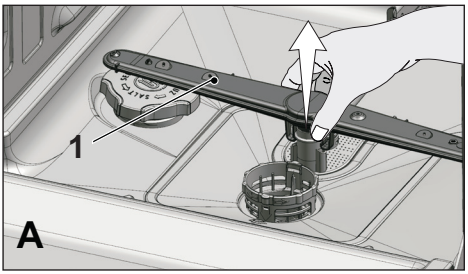

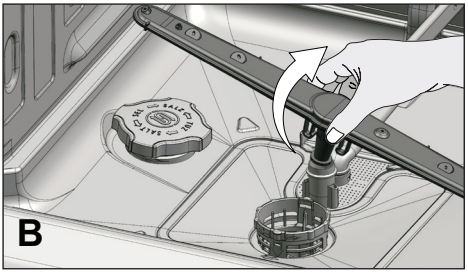

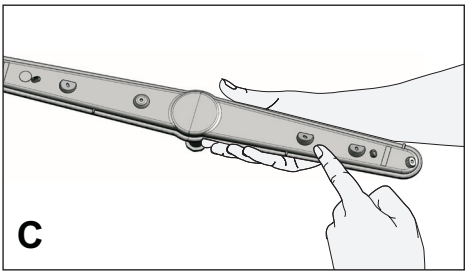

Upper impeller

Check if the holes on the upper impeller (1) are clogged. If they are clogged, remove and clean the impeller. Turn its nut to left to remove the upper impeller (A, B).
Make sure that the nut is tightened well when installing the upper impeller.

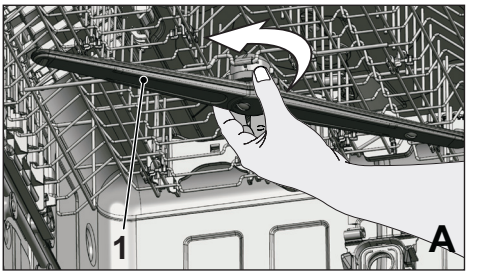

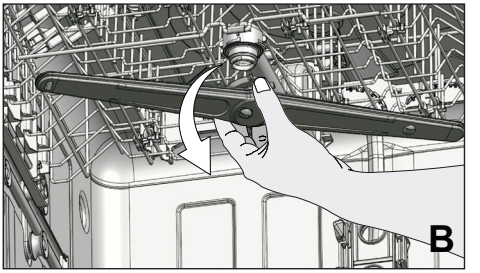

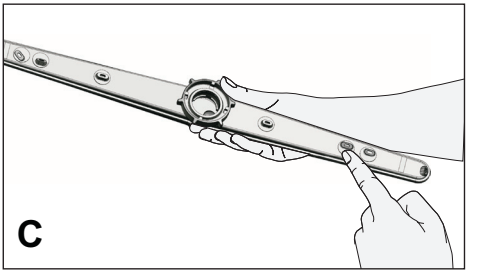

Top Impeller

Check if the holes on the top impeller (1) of your machine are clogged. If they are clogged, remove and clean.
To remove them, slightly (↑) push them upwards and then (↶) turn left (A,B).
To install the impeller, seat it into its slot, push slightly upwards and turn it rightwards until it is securely tightened.
When the impeller is released, check if it rotates without any obstruction.

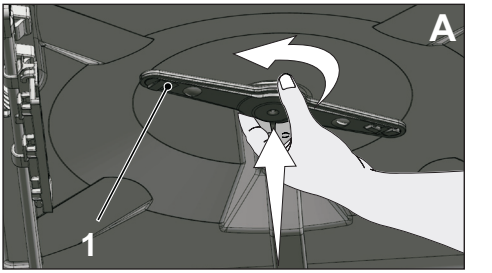

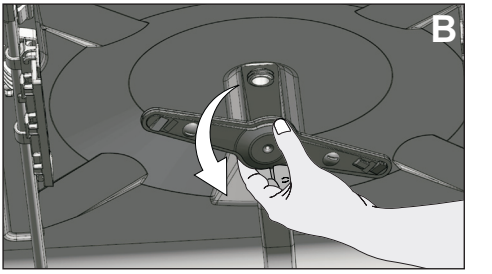

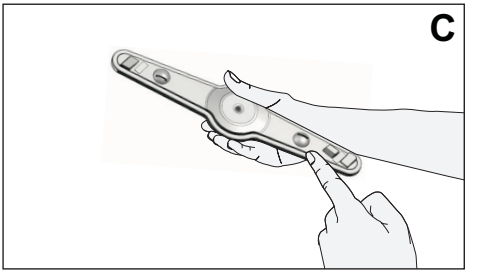

7 Troubleshooting

Machine does not start.

- Power cable is unplugged. > > > Check if the power cable is plugged in.
- Fuse is blown. > > > Check the fuses in your house.
- Water is cut. > > > Make sure that the water inlet tap is open.
- Door of the machine is open. > > > Make sure that you have closed the door of the machine.
- On / Off button is not pressed. > > > Make sure that you have turned on the machine by pressing the On / Off button.

Dishes are not washed clean

- Dishes are not placed orderly in the machine. > > > Load the dishes as described in the user manual.
- Selected programme is unsuitable. > > > Select a programme with a higher temperature and cycle time.
- Impellers are stuck. > > > Prior to starting the programme, turn the lower and upper impellers by hand to make sure that they rotate freely.
- Impeller holes are clogged. > > > Lower and upper impeller holes might be clogged with food remnants such as lemon pips. Clean the impellers regularly as illustrated in section "Cleaning and Care".
- Filters are clogged. > > > Check if the filter system is clean. Clean the filter system regularly as illustrated in section "Cleaning and Care".
- Filters are installed incorrectly. > > > Check the filter system and make sure that it is installed correctly.
- Baskets are overloaded. > > > Do not overload the baskets in excess of their capacity.
- Detergent is stored under unsuitable conditions. > > > If you are using powder detergent, do not store the detergent package in humid places. Keep it in a closed container if possible. For ease-of-storing, we recommend you to use tablet detergents.
- Detergent is not sufficient. > > > If you are using powder detergent, adjust the amount of detergent according to the soiling degree of your dishes and/or programme definitions. We recommend you to use tablet detergents for optimum results.
- Rinse aid is not sufficient. > > > Check the rinse aid indicator and add rinse aid if necessary. Increase the rinse aid setting if there is enough amount of rinse aid in the machine.
- Detergent dispenser lid is left open. > > > Make sure that the detergent dispenser lid is closed tightly after adding detergent.

Dishes are not dry at the end of cycle

- Dishes are not placed orderly in the machine. > > > Place your dishes in a way that no water will accumulate in them.

- Rinse aid is not sufficient. >>> Check the rinse aid indicator and add rinse aid if necessary. Increase the rinse aid setting if there is enough amount of rinse aid in the machine.
- Machine is unloaded right after the programme is over. >>> Do not unload your machine right after washing process is completed. Slightly open the door and wait for evacuation of the steam inside for a while. Unload the dishes after the pieces cool down to a touchable level. Start unloading process from the lower basket. Thus, dropping of water remained on a piece at upper basket onto the pieces at lower basket is prevented.
- Selected programme is unsuitable. >>> Since rinsing temperature is low at programmes with short duration, drying performance will also be low. Select programmes with longer duration for a higher drying performance.
- Surface quality of the kitchen utensils is deteriorated. >>> Desired washing performance can not be obtained on kitchen utensils with deteriorated surfaces and it is not suitable to use such utensils in terms of hygiene as well. Also, water can not flow easily on deteriorated surfaces. It is not recommended to wash such kitchen utensils in dishwasher.

It is normal that drying complaints can be experienced with Teflon kitchen utensils. It is associated with the structure of Teflon. Since the surface tensions of Teflon and water are different, water droplets will remain as beads on the Teflon surface.

Tea, cafe or lipstick stains remain on dishes.

- Selected programme is unsuitable. >>> Select a programme with a higher temperature and cycle time.
- Surface quality of the kitchen utensils is deteriorated. >>> Tea and cafe stains or other dye spots may not be cleaned in dishwasher when they have penetrated in deteriorated surfaces. Desired washing performance can not be obtained on kitchen utensils with deteriorated surfaces and it is not suitable to use such utensils in terms of hygiene as well. It is not recommended to wash such kitchen utensils in dishwasher.
- Detergent is stored under unsuitable conditions. >>> If you are using powder detergent, do not store the detergent package in humid places. Keep it in a closed container if possible. For ease-of-storing, we recommend you to use tablet detergents.

Lime traces remain on dishes and glassware gains a misty appearance

- Rinse aid is not sufficient. >>> Check the rinse aid indicator and add rinse aid if necessary. Increase the rinse aid setting if there is enough amount of rinse aid in the machine.
- Water hardness setting is low or salt level is insufficient >>> Measure the hardness of the supply water appropriately and check the water hardness setting.
- Salt leakage exists. >>> Pay attention not to spill salt around the salt filling hole while adding salt. Make sure that the salt reservoir lid is tightly closed after finishing

the filling process. Run the prewash programme to remove the salt that spilled inside the machine. Since the salt granules that will remain under the lid will dissolve during prewash, causing the lid loosen, check the lid once again at the end of the programme.

There is a different odour in the machine

A new machine has a peculiar odour. It will fade out after a couple of washes.

- Filters are clogged. >>> Check if the filter system is clean. Clean the filter system regularly as illustrated in section "Cleaning and Care".
- Dirty dishes are kept in dishwasher for 2-3 days. >>> If you are not going to start the machine right after you have put the dishes into it, remove the remnants on the dishes and run the Prewash programme without detergent every 2 days. In such cases, do not close the door of the machine completely in order to avoid odour build up in machine. You can also use commercially available odour removers or machine cleaners.

Rust, discoloration or surface deterioration occurs on dishes

- Salt leakage exists. >>> Salt may cause deterioration and oxidation on metal surfaces. Pay attention not to spill salt around the salt filling hole while adding salt. Make sure that the salt reservoir lid is tightly closed after finishing the filling process. Run the prewash programme to remove the salt that spilled inside the machine. Since the salt granules that will remain under the lid will dissolve during prewash, causing the lid loosen, check the lid once again at the end of the programme.
- Salty food remnants have remained on dishes for a long time. >>> If cutlery soiled with such foods will be kept waiting in machine, dirt must be removed by prewash or dishes must be washed without being kept waiting.
- Electric installation is not grounded. >>>Check if your machine is connected to the actual grounding line. Otherwise, the static electric created in the product causes arcs on the surfaces of metal items creating pores, removing the protective cover on the surface and causing discoloration.
- Intensive cleansers such as bleaches are used. >>> Protective cover on metal surfaces gets damaged and looses its efficiency in time when it gets in contact with cleansers such as bleach. Do not wash your dishes with bleach.
- Metal items particularly such as knives are used for purposes other then their intended uses. >>> Protective cover on the edges of knives may get damaged when they are used for purposes such as opening cans. Do not use metal kitchen utensils out of their intended uses.
- Cutlery are made of low quality stainless steel. >>> Corrosion on such items is inevitable; they should not be washed in dishwashers.
- Kitchen utensils that are already corroded are washed in dishwasher. >>> Rust on a corroded item can migrate to other stainless steel surfaces and cause corrosion on those surfaces as well. Such items should not be washed in dishwashers.

Detergent remains in detergent dispenser.

- Detergent dispenser was damp when adding detergent. > > > Make sure that the detergent dispenser is dried well prior to filling it with detergent.
- Detergent is added long before the washing process. > > > Pay attention to add detergent shortly before start-up of the washing.
- Opening of the detergent dispenser lid is prevented during washing. > > > Place the dishes in a way that will not prevent the detergent dispenser lid from opening and the water going into the machine from impellers.
- Detergent is stored under unsuitable conditions. > > > If you are using powder detergent, do not store the detergent package in humid places. Keep it in a closed container if possible. For ease-of-storing, we recommend you to use tablet detergents.
- Impeller holes are clogged. > > > Lower and upper impeller holes might be clogged with food remnants such as lemon pips. Clean the impellers regularly as illustrated in section "Cleaning and Care".

Decorations and ornaments on kitchen utensils are being erased.

Decorated glasses and decorated lustre porcelains are not suitable for washing in the dishwasher. Manufacturers of some glassware and porcelain tableware items do not recommend washing such kitchen utensils in the dishwashers either.

Dishes are scratched.

Kitchen utensils that contains or are made of aluminum should not be washed in dishwasher.

- Salt leakage exists. > > > Pay attention not to spill salt around the salt filling hole while adding salt. Spilled salt can cause scratches. Make sure that the salt reservoir lid is tightly closed after finishing the filling process. Run the prewash programme to remove the salt that spilled inside the machine. Since the salt granules that will remain under the lid will dissolve during prewash, causing the lid loosen, check the lid once again at the end of the programme.
- Water hardness setting is low or salt level is insufficient > > > Measure the hardness of the supply water appropriately and check the water hardness setting.
- Dishes are not placed orderly in the machine. > > > When placing the glasses and other glassware into the basket lean them not against other dishes but the edges or racks of the basket or the glass support tines. Striking of the glasses to each other or to other dishes due to the impact of water during washing can cause breaks, or scratches on their surfaces.

A smear remains on glasses that resembles milk stain which can not be removed when wiped by hand. A bluish / rainbow appearance occurs when the glass is pointed to light.

- Excessive rinse aid is used. > > > Lower rinse aid setting. Clean the spilled rinse aid when adding rinse aid.
- Corrosion has occurred on glass due to soft water. > > > Measure the hardness of the supply water appropriately and check the water hardness setting. If your supply water is soft (< 5 dH), do not use salt. Choose programmes that wash in higher temperatures (e.g. 60-65°C). You can also use glass protective detergents that are commercially available.

Foam forms in the machine.

- Dishes are washed with hand-wash detergent by hand but not rinsed before placing them into the machine. > > > Hand-wash detergents do not contain antifoam. There is no need to hand-wash the dishes before placing them into the machine. Removing the coarse soil on the dishes under tap water, with a tissue paper or fork will be sufficient.
- Rinse aid has spilled into the machine when adding rinse aid. > > > Take care that rinse aid is not spilled in the machine when you are filling it. Clean any spilled rinse ait with the help of a tissue paper/towel.
- Lid of the rinse aid reservoir is left open. > > > Make sure that the lid of the rinse aid reservoir is closed after adding rinse aid.

Kitchen utensils are broken.

- Dishes are not placed orderly in the machine. > > > Load the dishes as described in the user manual.
- Baskets are overloaded. > > > Do not overload the baskets in excess of their capacity.

Water remains in the dishwasher at the end of the programme.

- Filters are clogged. > > > Check if the filter system is clean. Clean the filter system regularly as illustrated in section "Cleaning and Care".
- Discharge hose is clogged/blocked. > > > Check the discharge hose. If necessary, remove the discharge hose, clear the blockage and insert is as illustrated in the user manual.

If you cannot eliminate the problem although you follow the instructions in this section, consult your dealer or the Authorised Service Agent. Never try to repair a nonfunctional product yourself.

8 Guarantee

Guarantee for Refrigeration, Cooking Appliances, Washing Machines & Dishwashers.

Please visit the "Support" section on the Beko website at www.beko.co.uk to register your two years warranty.

Your new Beko product is guaranteed against the cost of breakdown repairs for two years from the date of the original purchase.

What is covered?

- Repairs necessary as a result of faulty materials, defective components or manufacturing defect.
- The cost of functional replacement parts, but excluding consumable items.
- The labour costs of a Beko approved repairer to carry out the repair

What is not covered?

- Transit, delivery or accidental damage or misuse and abuse.
- Cabinet or appearance parts, including knobs, flaps, handles or container lids.
- Accessories or consumable items including but not limited to, ice trays, scrapers, cutlery baskets, filters and light bulbs.
- Repairs required as a result of unauthorised repair or inexpert installation that fails to meet the requirements contained in the user instruction book.
- Repairs to products used on commercial or non-residential household premises.
- Loss of frozen food in freezers or fridge/freezers. (Food loss insurance is often included within your household contents insurance policy, or may be available separately from your retailer).

Important notes.

- Your Beko product is designed and built for domestic household use only.
- The guarantee will be void if the product is installed or used in commercial or non-residential domestic household premises.
- The product must be correctly installed, located and operated in accordance with the instructions contained in the User Instructions Booklet provided.
- Professional installation by a qualified Electrical Domestic Appliance Installer is recommended for all Washing Machines, Dishwashers and Electric Cookers
- Gas Cookers must only be installed by a Gas safe (or BORD GAIS) registered Gas Installer.
- The guarantee is given only within the boundaries of the United Kingdom and the Republic of Ireland.
- The guarantee is applicable only to new products and is not transferable if the product is resold.
- Beko disclaims any liability for incidental or consequential damages.
- The guarantee does not in anyway diminish your statutory or legal rights.
- The product guarantee does not cover damages to plates,glass ware, cutlery, crockery and also damage to the product itself as a result of using these "Three-in-one", "Two-in-one" detergents.

Please keep your purchase receipt or other proof of purchase in a safe place; you will need to have it should the product require attention under guarantee.
You should also complete the details below; it will help us assist you when requesting service. (The model number is printed on the Instruction Booklet and the serial number is printed on the Rating Label affixed to the appliance)

Model No:
Serial No:
Retailer:
Date of purchase:

For service under guarantee simply telephone the appropriate number below

UK Mainland & Northern Ireland

Fridges & Freezers	0845 6004903	or	0345 6004903
Electric Cookers	0845 6004902	or	0345 6004902
Gas&Dual Fuel Cookers	0845 6004905	or	0345 6004905
Washing Machines & Dishwashers	0845 6004906	or	0345 6004906

Republic of Ireland

All Refrigeration, All Cookers Washing Machines & Dishwashers	01 862 3411

Before requesting service please check the trouble-shooting guide in the Operating Instructions as a charge may be levied where no fault is found even though your product may still be under guarantee.

Service once the manufacturers guarantee has expired.

If you have purchased an extended guarantee please refer to the instructions contained within the extended guarantee agreement document. Otherwise please call the appropriate number above where service can be obtained at a charge.

Should you experience any difficulty in obtaining service please contact the Beko Customer Help-Line.
Tel: 0845 6004911
e-mail: service@beko.co.uk

Beko plc, Beko House, 1 Greenhill Crescent, Watford Hertfordshire, WD18 8QU, UK
www.beko.co.uk

15 0359 0100-REV-AA-06/2015